OPEN FIREPLACES FROM BRUNNER

Urfeuer® Eck 50/66/44

State: 2018-04-11

BRUNNER®
made in germany.

Dimension sheets - Urfeuer® Eck 50/66/44

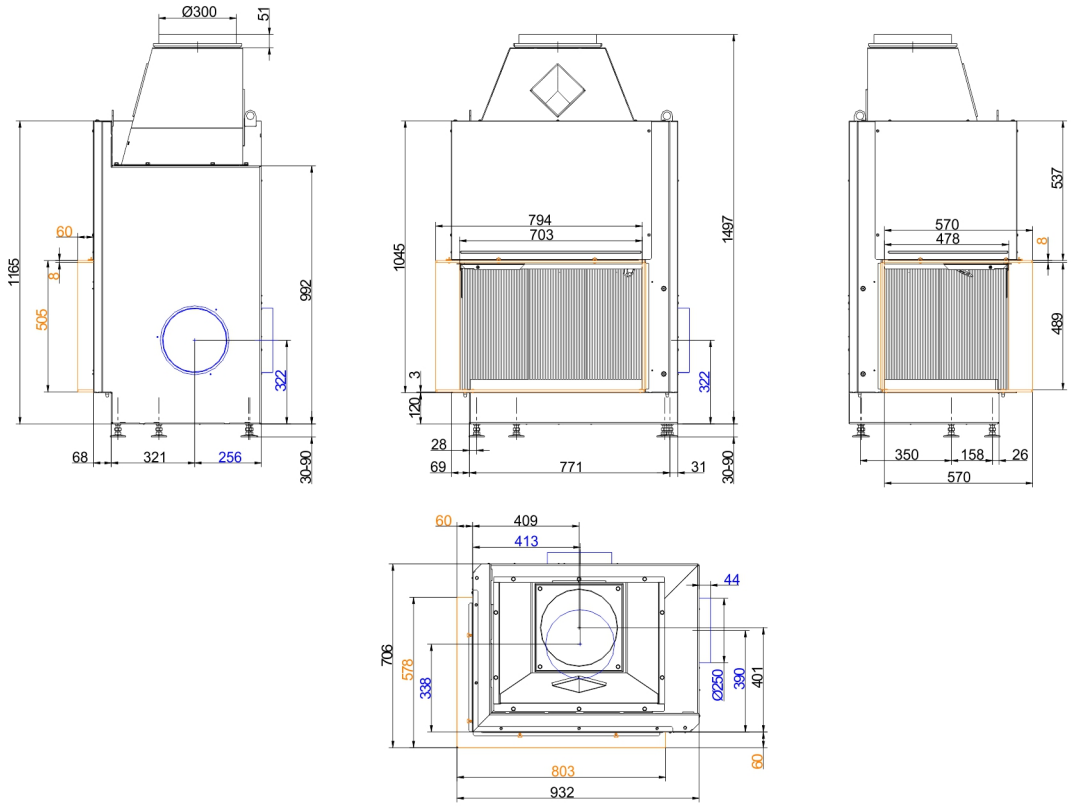

… left with mounting frame

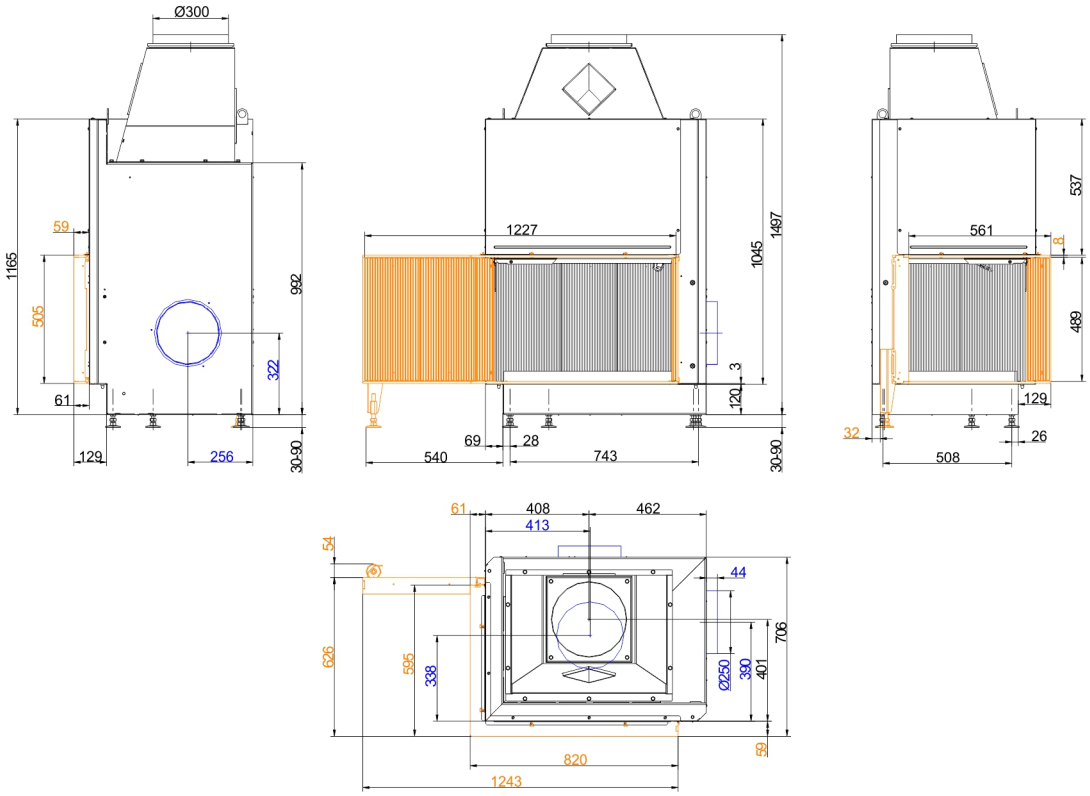

… left with mounting frame L2, 90°

Dimension sheets - Urfeuer® Eck 50/66/44

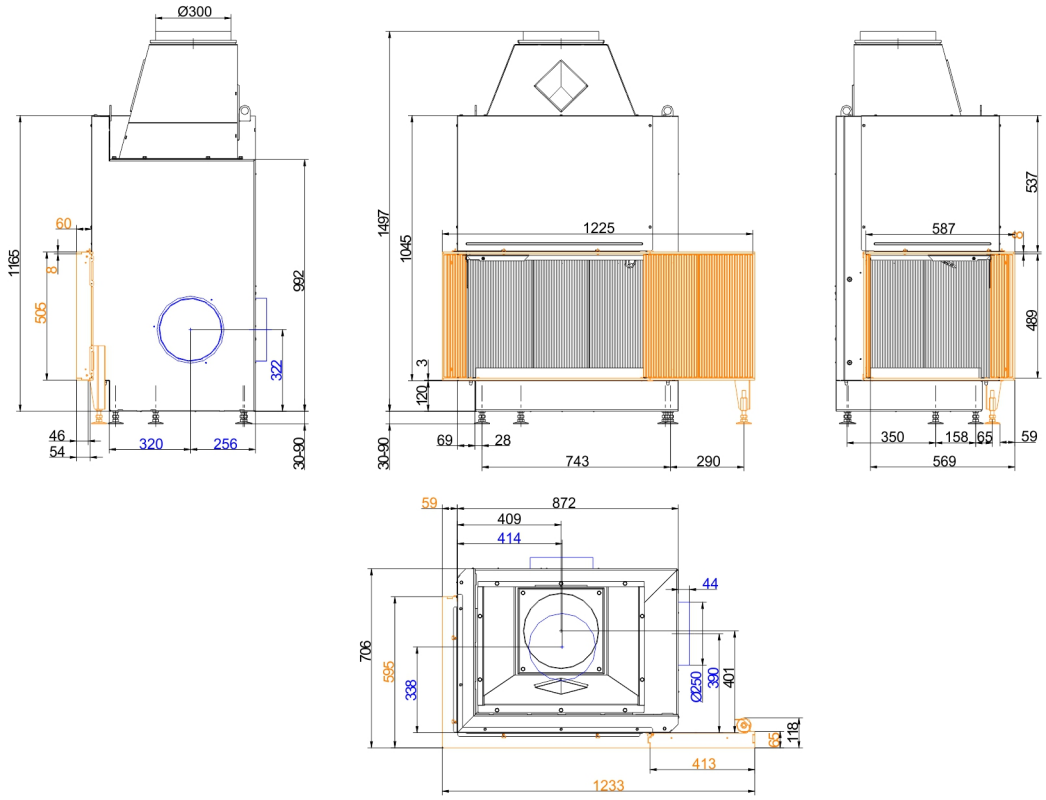

… left with mounting frame R2, 0°

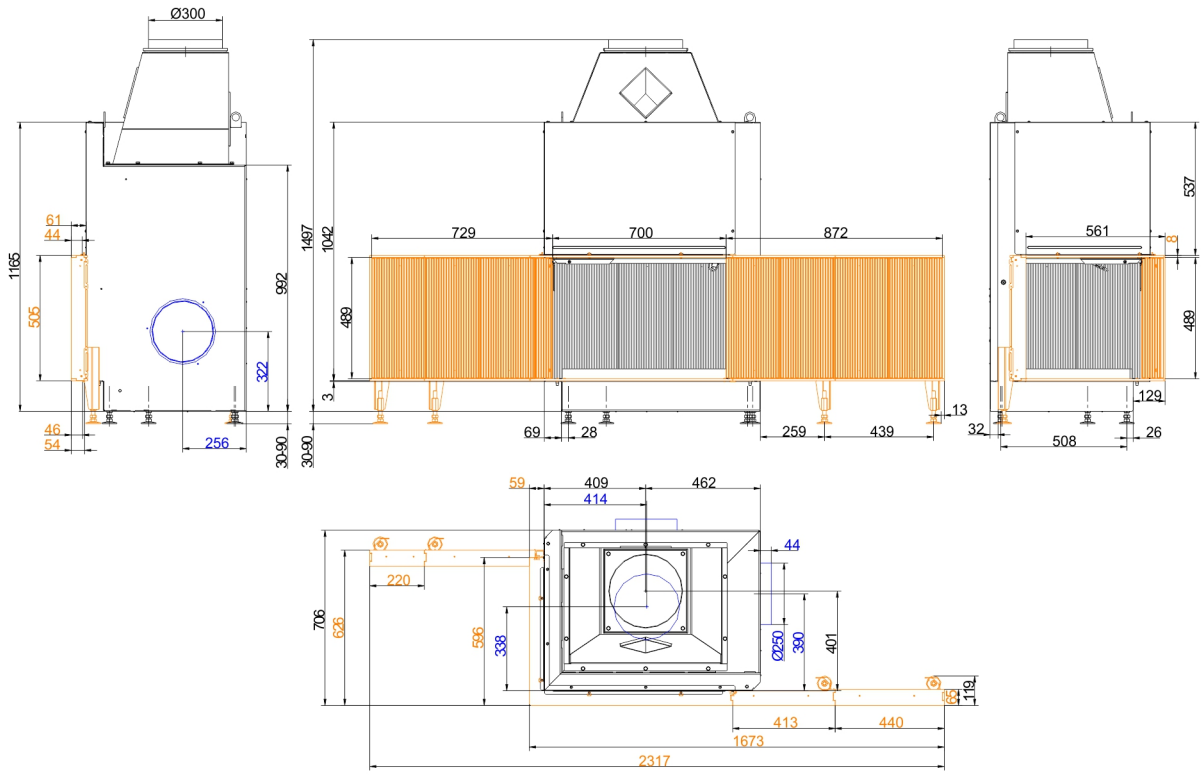

… left with mounting frame L3, 90° / R4, 0°

Dimension sheets - Urfeuer® Eck 50/66/44

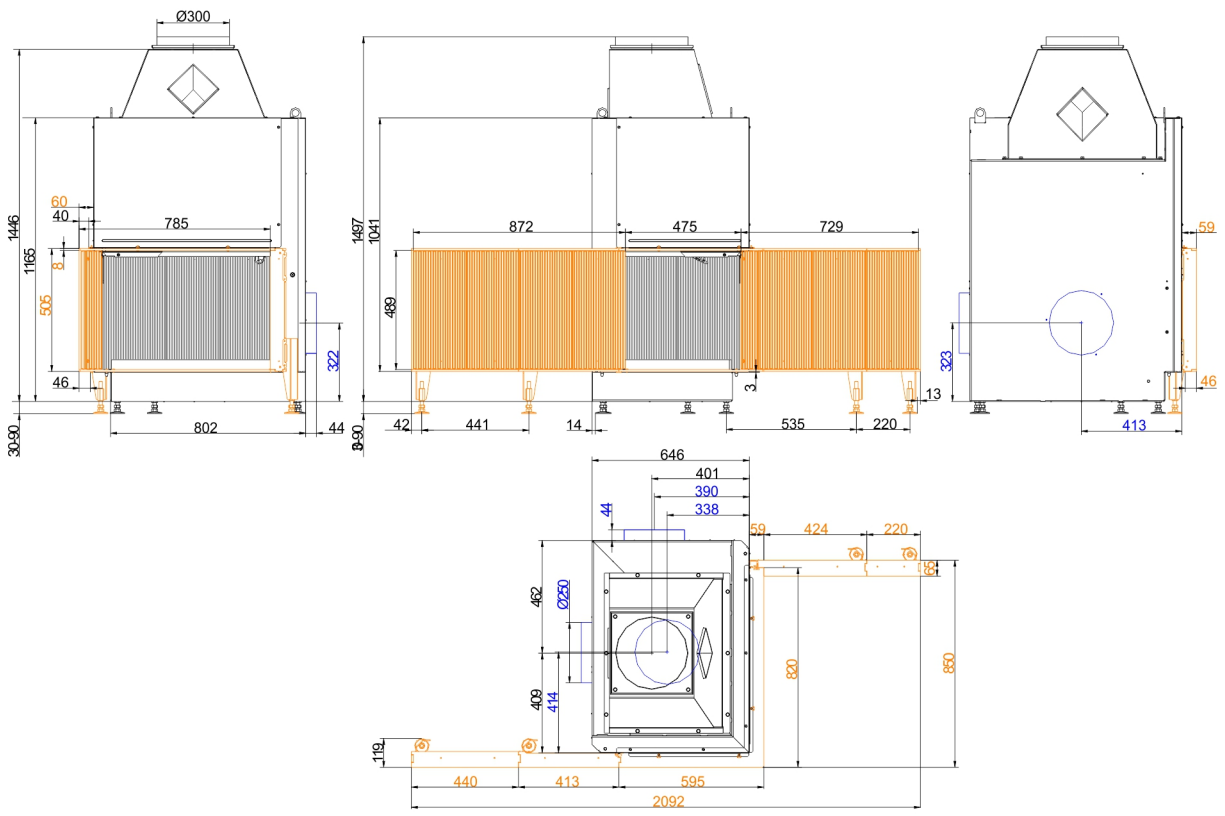

… left with mounting frame L4, 0° / R3, 90°

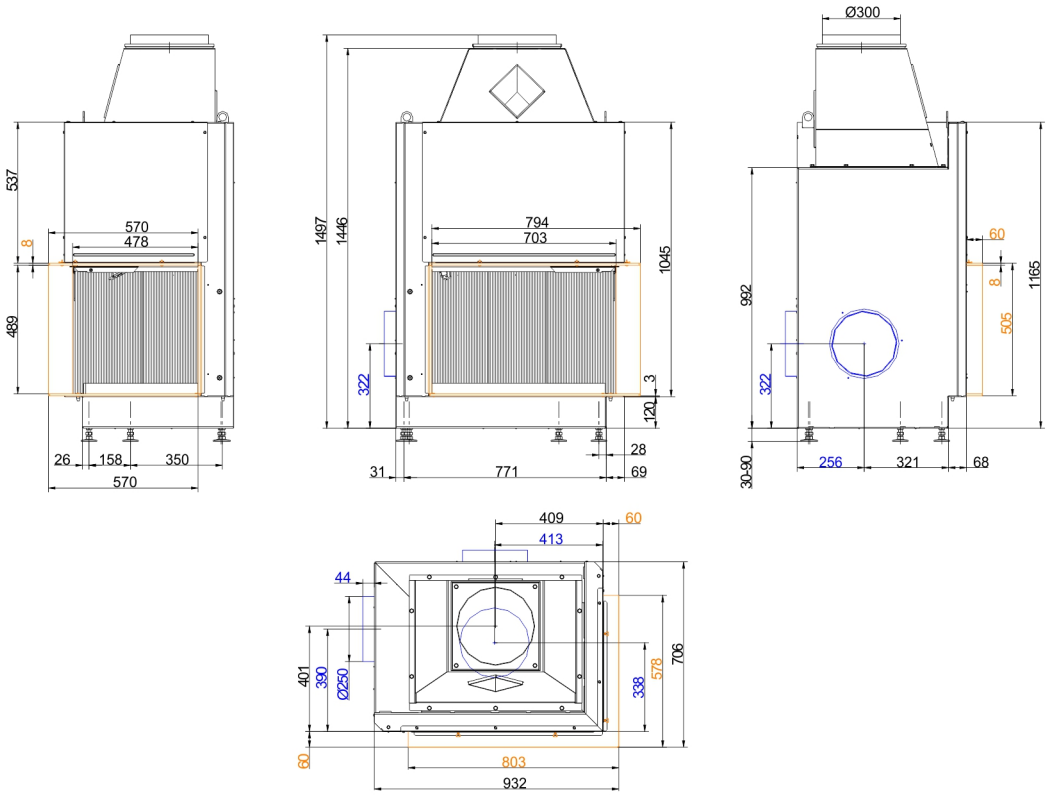

… right with mounting frame

Dimension sheets - Urfeuer® Eck 50/66/44

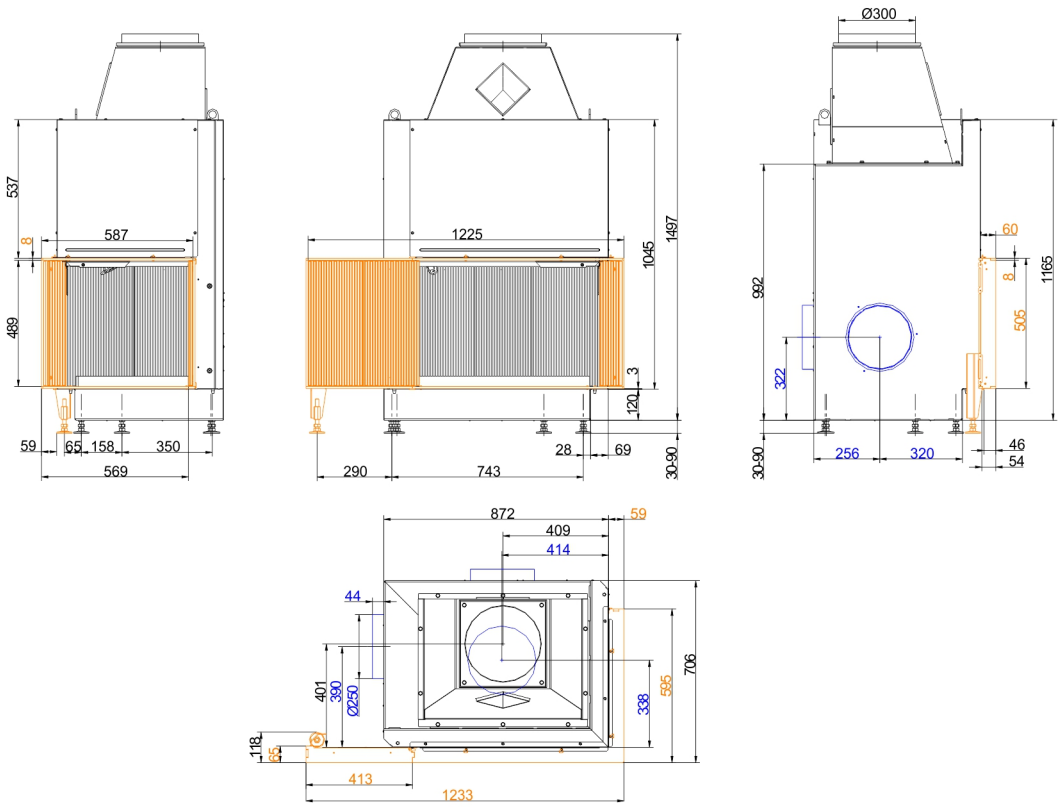

… right with mounting frame L2, 0°

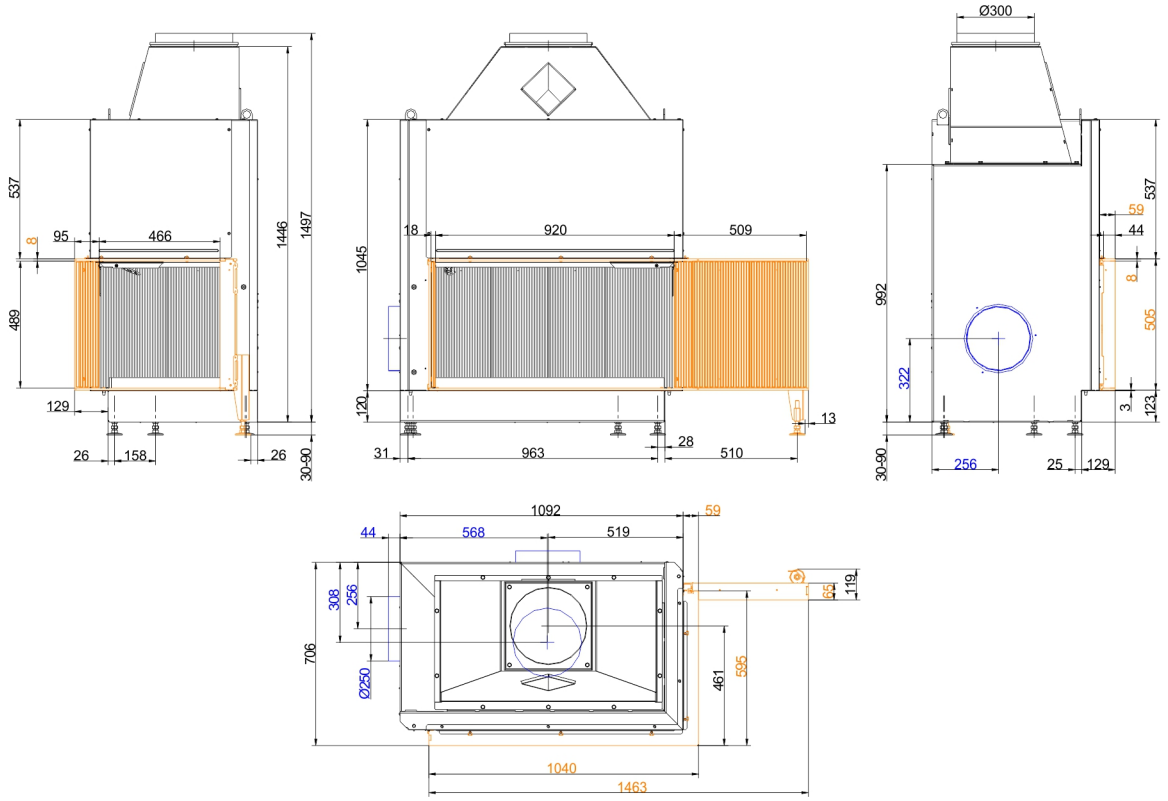

… right with mounting frame R2, 90°

Dimension sheets - Urfeuer® Eck 50/66/44

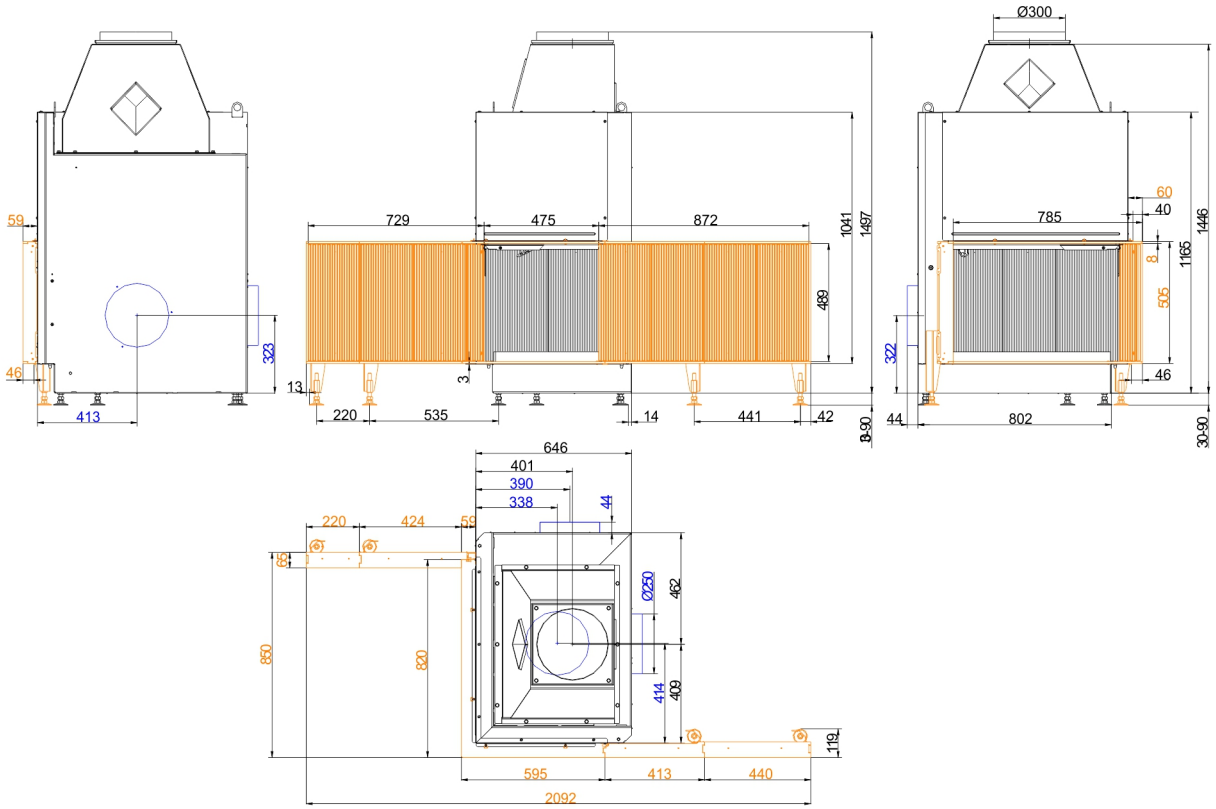

… right with mounting frame L3, 90° / R4, 0°

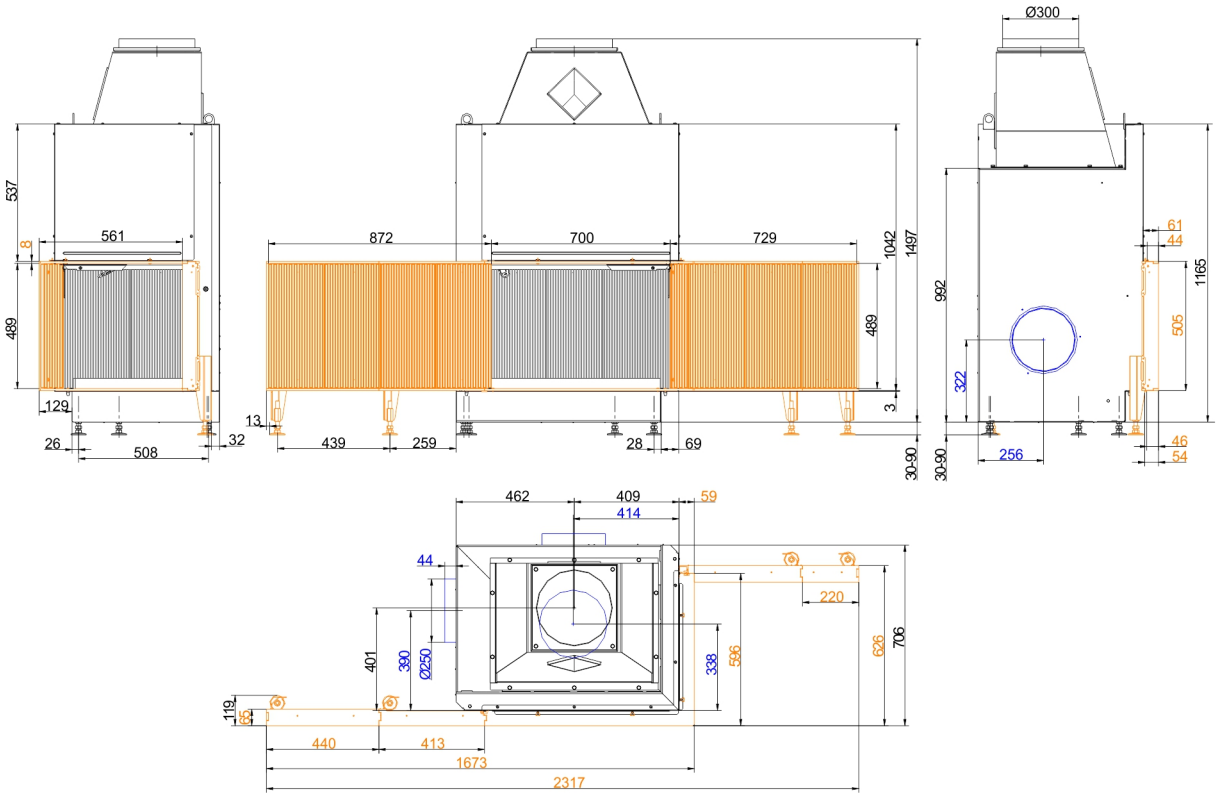

… right with mounting frame L4, 0° / R3, 90°

We suggest for CAD planing Palette CAD. Permanent updated drawings: www.brunner.de
Frames / front versions are marked colored.

State: 2018-04-11

Planning and installation - Urfeuer® Eck 50/66/44

Tested according to		EN 13229 W
EEI		53.5
Data for functional demonstration		
Flue gas mass flow	g/s	105
Outlet temperature	°C	105
Necessary supply pressure	Pa	6
Total fuel load	kg	2 - 4
Combustion air consumption	m^3/h	265
Combustion air connection Ø	mm	250
Cross-section of gratings		
Convection air	cm^2	500
Supply air	cm^2	500
Min. distances of fireplace without / with convection casing		
to insulation layer	cm	6
to mounting floor	cm	2.5
Thermal insulation without / with air gratings		
Mounting wall	cm	10
Ceiling	cm	14
Brick lining for combustible wall	cm	10
Weight		
Fireplace / combustion chamber	kg	206 / 91 / -

Ulrich Brunner GmbH
Zellhuber Ring 17 - 18
D-84307 Eggenfeldern
Telefonat: +49 / (0)87 21 / 7 71-0
Telefax: +49 / (0)87 21 / 7 71-100
info@brunner.de | www.brunner.de

BRUNNER®
made in germany.